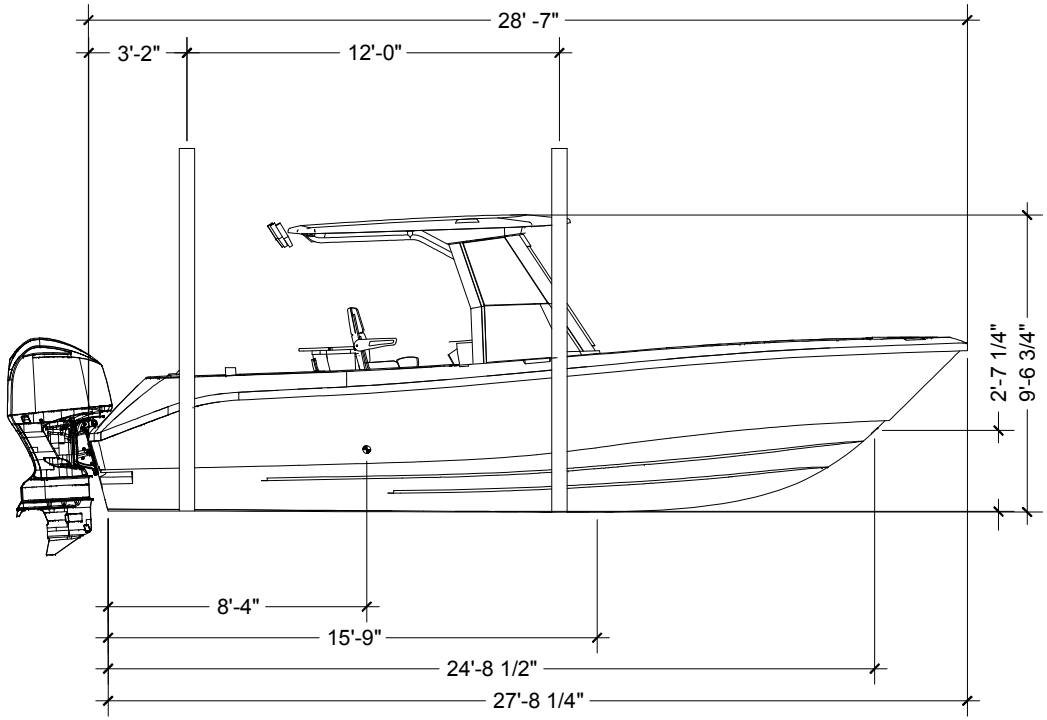

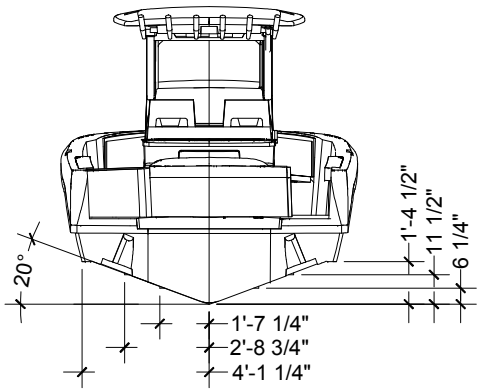

GRAVING PLAN **295 CC** **NTS** **6/29/15** **RB**